IGEX-98 DATA FLOW

Carey E. Noll
IGEX Data Flow Coordinator
NASA GSFC
Greenbelt, MD 20771

IGEX-98 Workshop
Nashville, Tennessee
September 13, 1999

IGEX-98 DATA FLOW

- IGEX philosophy
- Participation summary
- IGEX data and products
- IGEX data flow
- IGEX data centers
- Problems encountered
- Conclusions/Recommendations

IGEX PHILOSOPHY

- IGEX infrastructure modeled after the IGS
- Hierarchy of data centers
- Allows for redundancy and backup
- Reduces network traffic
- Many participants also serve within the IGS

PARTICIPATION SUMMARY

- 74 receivers at 62 sites sent data to IGEX data centers
  - 47 dual-frequency
  - 20 single-frequency
  - 7 GPS-only receivers
- 30-35 receivers continue to operate
- 30 SLR stations
  - Tracked 18 GLONASS satellites
  - Nearly 6,500 passes and 37K normal points archived during campaign

INTERNATIONAL GLONASS EXPERIMENT (IGEX-98) NETWORK

IGEX DATA and PRODUCTS

- **GLONASS DATA:**
  - Daily files (00:00:00 and 23:59:30 GPS time)
  - 30-second sampling rate
  - Observation, GPS and GLONASS navigation, and optional meteorological data
  - RINEX format (Hatanaka and UNIX compression)
  - Data from receiver to global data center within 48 hours
- **IGEX PRODUCTS:**
  - Daily or weekly GLONASS ephemerides in SP3 format
  - Satellite clock information
  - Earth rotation parameters
  - Station coordinates in SINEX format

IGEX FILE NAMING CONVENTION
(Data)

- Files named ssssddd0.yyt.Z where
  - ssss is 4-character monument ID for site
  - ddd is 3-digit day of year
  - 0 indicates file contains all data for data day
  - yy is 2-digit year
  - t is file type
    - o is observation file
    - n is GPS navigation file
    - g is GLONASS navigation file
    - m is meteorological data file
    - s is summary file containing data quality information
- Filenames in lowercase (except for the .Z)

IGEX DATA FLOW
(General)

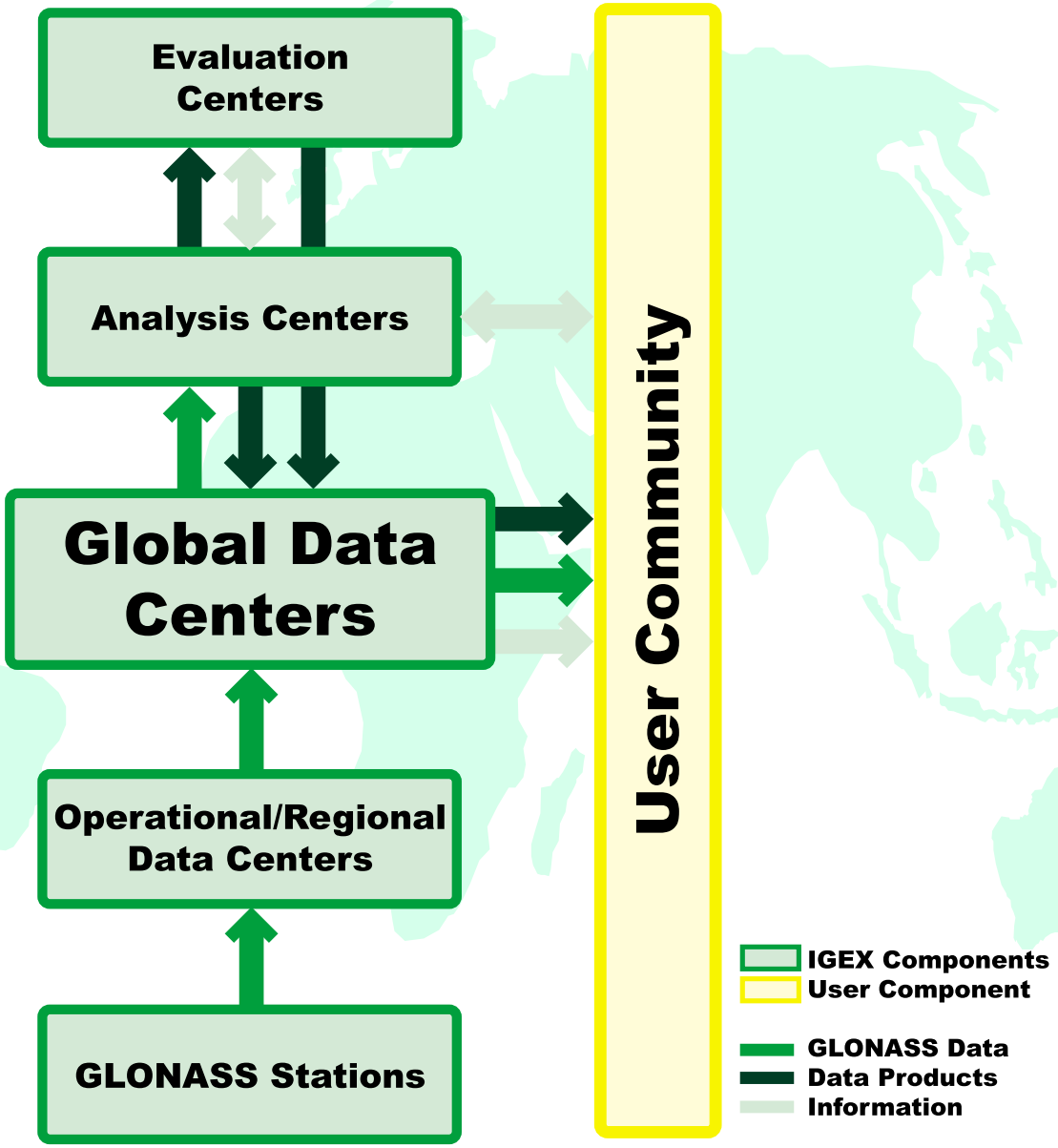

IGEX Data Flow (by Data Center)

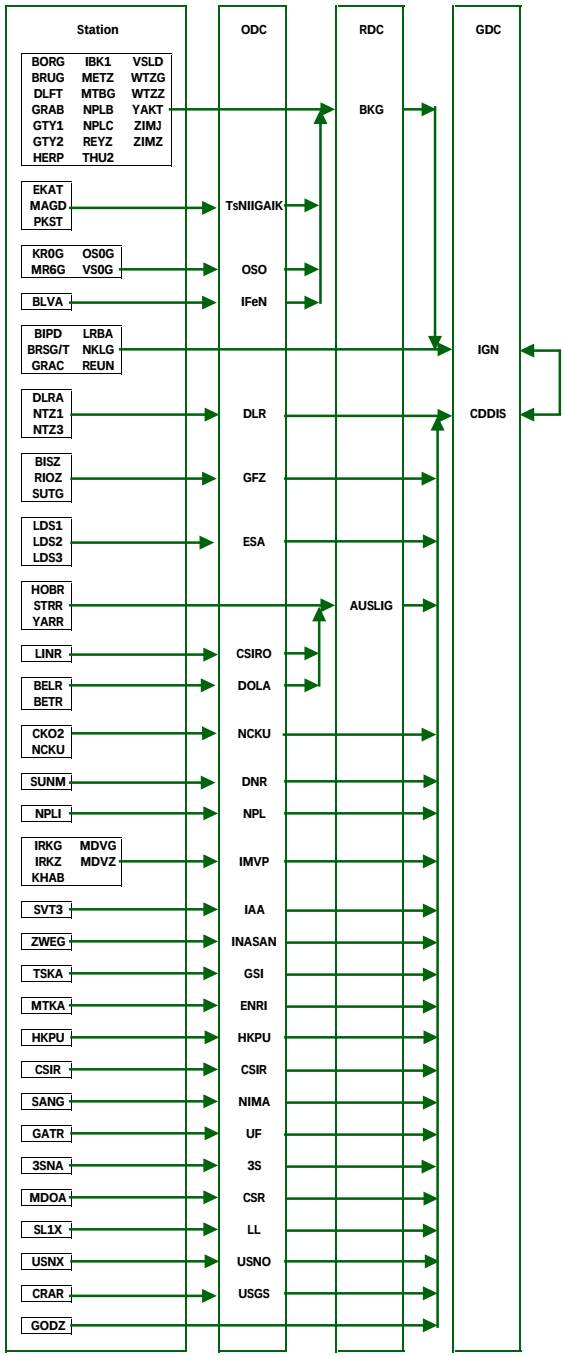

Acronyms

AUSLIG	Australian Land Information Group
BKG	Bundesamt für Kartographic und Geodäsie, Germany
CDDIS	Crustal Dynamics Data Information System, USA
CSIR	Council for Scientific and Industrial Research, South Africa
CSIRO	Commonwealth Scientific and Industrial Research Organisation, Australia
CSR	Center for Space Research, University of Texas at Austin, USA
DLR	Deutsches Zentrum für Luft-und Raumfahrt, Germany
DNR	Department of Natural Resources, Australia
DOLA	Department of Land Administration, Australia
ENRI	Electronic Navigation Research Institute, Japan
ESA	European Space Agency, Germany
GDC	Global Data Center
GFZ	GeoForschungsZentrum, Germany
GSI	Geographic Survey Institute, Japan
HKPU	Hong Kong Polytechnic University, China
IAA	Institute of Applied Astronomy, Russia
IFeN	Institute of Applied Geodesy/University FAF Munich, Germany
IGN	Institut Geographique National, France
IMVP	Institute of Metrology for Time and Space, Russia
INASAN	Institute of Astronomy, Russian Academy of Sciences
LDC	Local Data Center
LL	Lincoln Labs, USA
NIMA	National Imagery and Mapping Agency, USA
NCKU	National Cheng Kung University, Taiwan
NPL	National Physical Laboratory, India
OC	Operational Center
OSO	Onsala Space Observatory, Sweden
RDC	Regional Data Center
TsNIIGAIK	Central Research Institute of Geodesy, Aerial Surveying, and Cartography, Russia
UF	University of Florida, USA
USGS	U.S. Geological Survey, USA
USNO	U.S. Naval Observatory, USA
3S	3-S Navigation, USA

IGEX DATA CENTERS

- **Operational**
  - Data from station
  - RINEX and QC data
  - Transmit to regional or global data center
- **Regional**
  - Gather data from operational centers
  - Transmit to global data center
  - BKG, DLR, GFZ, ESA, AUSLIG, NCKU
- **Global**
  - Provide archive of and access to data and products
  - CDDIS, IGN

PROBLEMS ENCOUNTERED

- Missing site logs: CKO2, EKAT, GATR, MAGD, NCKU, NPLI, PKST, YAKT
- TEQC
  - Required modification for GLONASS data type
  - Required modification to handle converter problems
- File format problems
  - Compression Gzip, not UNIX compress
  - ASCII not binary file transfer
  - Extra <CR>s
- File naming conventions
  - Upper vs. lower case
  - .Z indicating compressed file
  - Misnamed files (d instead of o)
- Null files transmitted to data centers

PROBLEMS ENCOUNTERED
(RINEX related)

- RINEX headers
  - non-conformance to standard
  - missing lines
- Receiver/antenna naming -- non-conformance to IGS standards
- V1 instead of V2
- Satellite number 0
  - Valid output for GG24 receiver
  - Invalid for RINEX
- RINEX converter problems
  - Time regression error with 3S converter
  - Field overflow (phase data) in Z-18 converter

CONCLUSIONS/ RECOMMENDATIONS

- **Stations**
  - Follow guidelines
- **Operational data centers**
  - Need to be clearly identified and consolidated (perhaps)
  - Responsibilities defined
  - Timeliness
  - More rigorous QC
    - TEQC
    - DUT integrity monitoring s/w?
- **Global data centers**
  - Need to ensure consistent data holdings